4090-9119 Relay IAM with Unsupervised Feedback Installation Instructions

Cautions and Warnings

DO NOT INSTALL ANY SIMPLEX PRODUCT THAT APPEARS DAMAGED. Upon unpacking your Simplex product, inspect the contents of the carton for shipping damage. If damage is apparent, immediately file a claim with the carrier and notify Simplex.

ELECTRICAL HAZARD - Disconnect electrical power when making any internal adjustments or repairs. Servicing should be performed by qualified Simplex Representatives.

STATIC HAZARD - Static electricity can damage components. Therefore, handle as follows:

1. Ground yourself before opening or installing components.
2. Keep uninstalled component wrapped in anti-static material at all times.

Introduction

The 4090-9119 Relay IAM with Unsupervised Feedback provides the 4100U FACP with output control of one Form-C contact set and input status from an unsupervised zone. The Relay IAM with Unsupervised Feedback provides a 2-state status (NORMAL or ALARM) of the monitored zone to the 4100U FACP. The IDNet channel provides the communication link between the Relay IAM with Unsupervised Feedback and FACP while powering the entire circuit.

The range of possible temperatures under which the 4090-9119 Relay IAM with Unsupervised Feedback can function is between 32° F (0° C) and 120° F (49° C). This Relay IAM operates normally under non-condensing humidity conditions up to 93% relative humidity at 90° F (32° C).

Installation

Relay IAM with Unsupervised Feedback installation consists of the following:

- Setting the address of the Relay IAM with Unsupervised Feedback address
- Making electrical connections to the Relay IAM with Unsupervised Feedback
- Mechanically installing the Relay IAM with Unsupervised Feedback

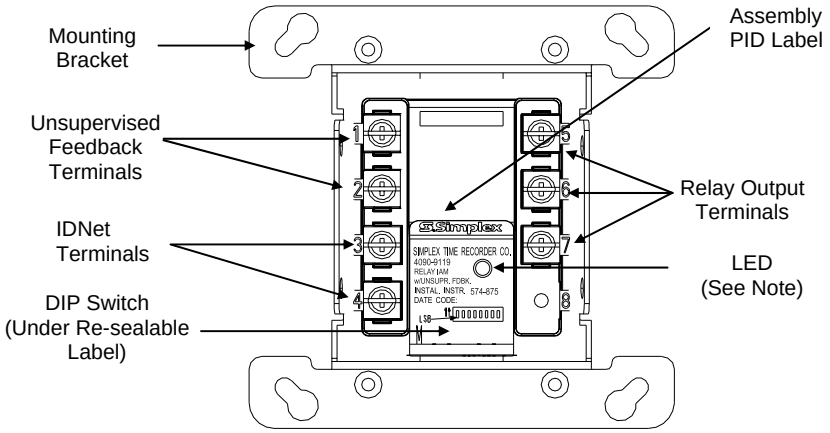

Note: The LED flashes approximately once every three seconds to indicate valid communications with the 4100U FACP.

Figure 1. Relay IAM with Unsupervised Feedback

Setting the Address of the Relay IAM with Unsupervised Feedback

Note: The IDNet channel supports address codes 1 through 250.

Each Relay IAM with Unsupervised Feedback has a unique address. The address of the Relay IAM with Unsupervised Feedback is set via an eight position dip switch (Figure 1). DIP switch position 1 is the least significant bit (LSB) and position 8 is the most significant bit (MSB). Set the Relay IAM with Unsupervised Feedback address using Figure 2 as reference. Use a small screwdriver or pen to set the switches. The device address for the Relay IAM with Unsupervised Feedback should be written on the re-sealable label; this information provides an aid in troubleshooting the system.

Note: DIP switch in “1” position is “ON” while DIP switch in “0” position is “OFF”.

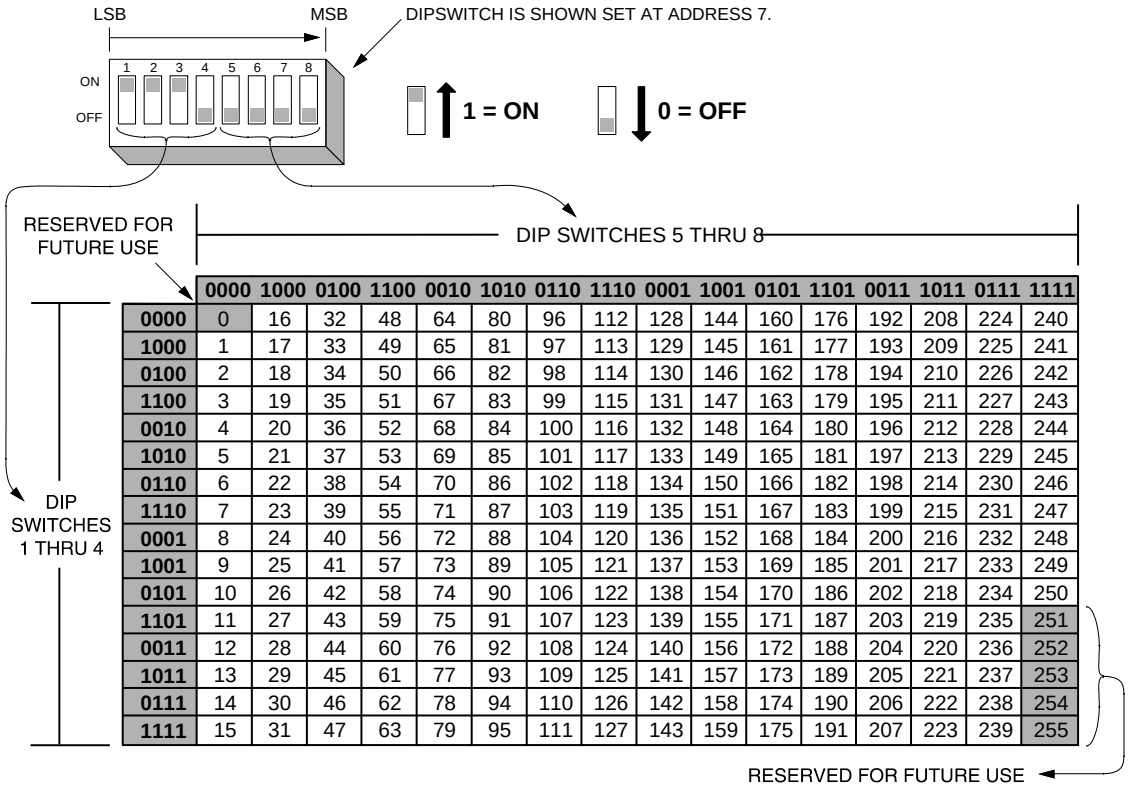

	0000	1000	0100	1100	0010	1010	0110	1110	0001	1001	0101	1101	0011	1011	0111	1111
0000	0	16	32	48	64	80	96	112	128	144	160	176	192	208	224	240
1000	1	17	33	49	65	81	97	113	129	145	161	177	193	209	225	241
0100	2	18	34	50	66	82	98	114	130	146	162	178	194	210	226	242
1100	3	19	35	51	67	83	99	115	131	147	163	179	195	211	227	243
0010	4	20	36	52	68	84	100	116	132	148	164	180	196	212	228	244
1010	5	21	37	53	69	85	101	117	133	149	165	181	197	213	229	245
0110	6	22	38	54	70	86	102	118	134	150	166	182	198	214	230	246
1110	7	23	39	55	71	87	103	119	135	151	167	183	199	215	231	247
0001	8	24	40	56	72	88	104	120	136	152	168	184	200	216	232	248
1001	9	25	41	57	73	89	105	121	137	153	169	185	201	217	233	249
0101	10	26	42	58	74	90	106	122	138	154	170	186	202	218	234	250
1101	11	27	43	59	75	91	107	123	139	155	171	187	203	219	235	251
0011	12	28	44	60	76	92	108	124	140	156	172	188	204	220	236	252
1011	13	29	45	61	77	93	109	125	141	157	173	189	205	221	237	253
0111	14	30	46	62	78	94	110	126	142	158	174	190	206	222	238	254
1111	15	31	47	63	79	95	111	127	143	159	175	191	207	223	239	255

Figure 2. Relay IAM with Unsupervised Feedback Address Chart

Panel Configuration

Configure the Relay IAM with Unsupervised Feedback to the 4100 panel using the *4100 Fire Alarm – PC Programmer Programming Manual (574-849).*

Making Electrical Connections to the Relay IAM with Unsupervised Feedback

Terminal connections for the Relay IAM with Unsupervised Feedback are illustrated in Figure 3.

CAUTION: Do not loop wire under terminals. Break wire runs to provide supervision.

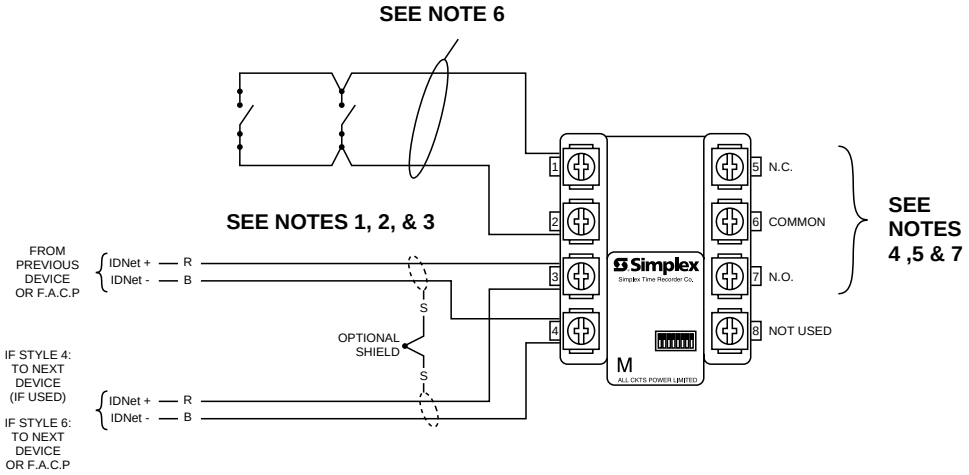

Notes:

1. Maximum allowable run from FACP to farthest device is not to exceed 2,500 feet (762 meters). Maximum total wire (including all T-Taps) from FACP is 10,000 feet (3,048 meters). IDNet lines are 18 AWG (0.823 mm/squared) twisted pair (shield recommended). When using shield, wire nut, splice, or solder the shield wires. Also insulate shield from the electrical box.
2. The Relay IAM with Unsupervised Feedback counts as a one-unit load.
3. IDNet wiring is supervised and Power-Limited. An IDNet circuit has a communications power rating of 36.25 volts (maximum) at .5 A, 3333 Baud.
4. Contractor wiring to relay contacts is unsupervised. Wire to local code (14 AWG [2.081 mm/squared] recommended with 12 AWG [3.309 mm/squared] maximum). Relay contacts are rated for 2 A (1 A for inductive load), 30 VDC and .5 A (0.25 A for inductive load), 120 VAC (non-power-limited). For power-limited operation, power must be provided from a power-limited auxiliary power output from the FACP or from a power-limited output of a power supply listed for fire protective signaling use. When both power-limited and non-power-limited sources are present, use Type FPL, FPLR, or FPLP power-limited cable for power-limited circuits. If the relay is used to control a fire safety function, it must be wired within 3 feet (91.44 cm) of the control circuit. Provisions to conform to NEC 760 power-limited and non-power-limited wiring separation must be made in the field wiring if non-power-limited wiring is used on the relay output.
5. If AC is used on relay terminals, you must add Label 526-831 to electrical box cover to indicate high voltage, ground electrical box and bracket to safety ground, and wire input circuit with twisted-shielded wire (shield connected to grounded bracket).
6. Unsupervised Feedback input circuits are not to exceed 20 feet (6.096 meters) and must be in conduit. Unsupervised Feedback lines are 18 AWG (0.823 mm/squared) wire. Unsupervised Feedback circuits are pulled up to 5 VDC by a 100 K resistor, which can source up to 50 uA (power-limited). Unsupervised Feedback inputs may be tested using ¼ watt, 1% resistors as follows: 450 K or more (normal) and 2 K or less (alarm).
7. Relay function is programmable.

Figure 3. Relay IAM with Unsupervised Feedback Connections

Mechanically Installing the Relay IAM with Unsupervised Feedback

Install the Relay IAM with Unsupervised Feedback into a grounded, 4-inch (10.16 cm) UL-Listed back box (not supplied) using Figure 4 as a reference. Mount the Relay IAM to the back box as follows:

1. Loosen the two screws on the square back box.
2. Mount the Relay IAM to the back box using the teardrop holes on the mounting bracket.
3. Secure the Relay IAM to the back box using the two #8/32 panhead screws.

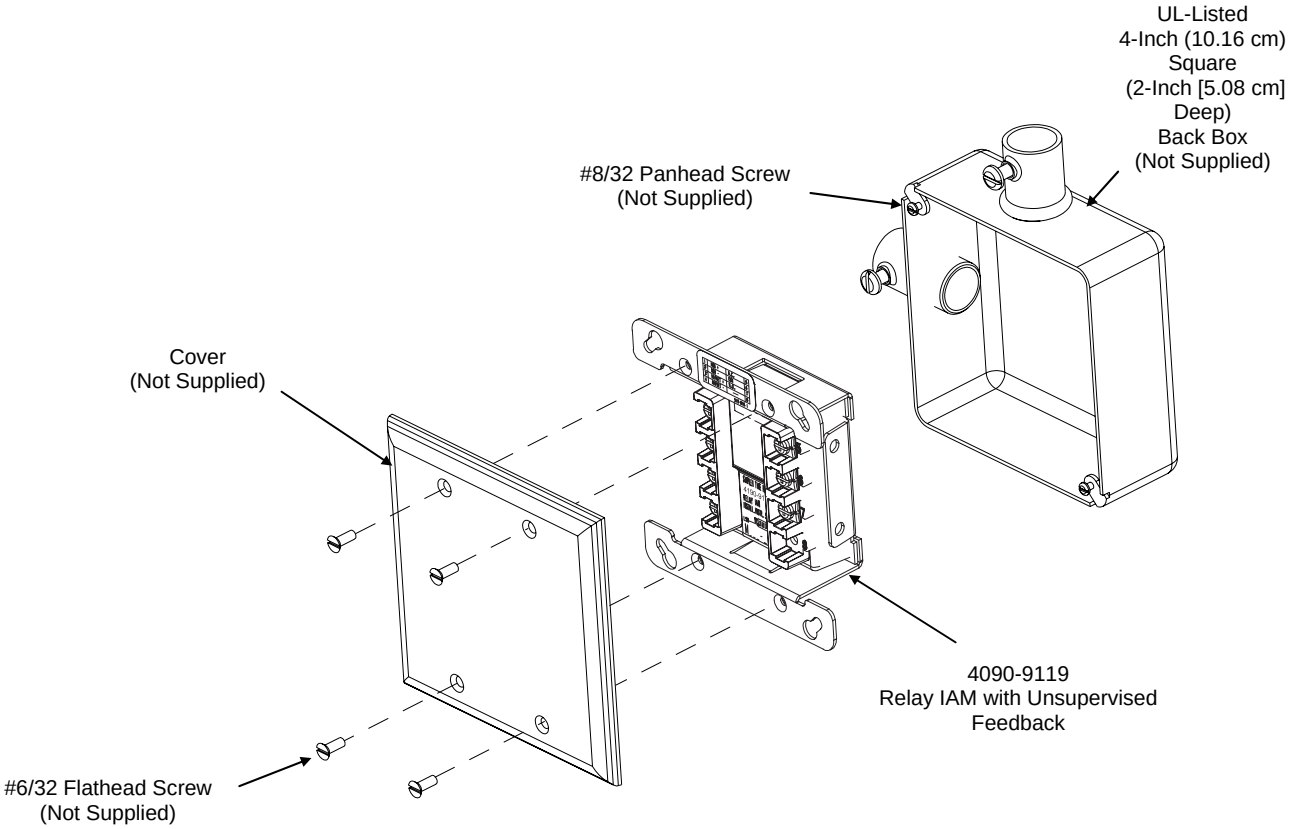

Note: Simplex offers semi-flush and surface covers (ordered separately) with a light pipe. The cover(s) with light pipe allow viewing of the communications LED without taking the cover off. Installation of the 4090-9801 semi-flush cover and 4090-9802 surface cover are detailed in publication *4090 IDNet™ Semi-Flush/Surface Covers and IAM Bracket Installation Instruction (574-796).*

Figure 4. Relay IAM with Unsupervised Feedback Back Box Installation